INSPECTION

1. INSPECT BRAKE MASTER CYLINDER

(a) Check the inside of the brake master cylinder for scratch.
HINT:
Replace the master cylinder sub-assembly if necessary.

2. INSPECT AND ADJUST BRAKE BOOSTER PUSH ROD

(a) Set SST on the master cylinder and lower the rod of the SST until it slightly touches the piston.
SST 09737-00013

(b) Apply chalk to the flat tip of the SST rod. Turn the SST upside down and measure the clearance between the brake booster push rod and the SST.
Clearance:
-0.21 to 0 mm (-0.0083 to 0 in.)
HINT:
If there is a clearance between the SST main body and the shell of the brake booster, the push rod is protruding too far. If the chalk does not stick on the tip of the brake booster push rod, the push rod protrusion is insufficient.

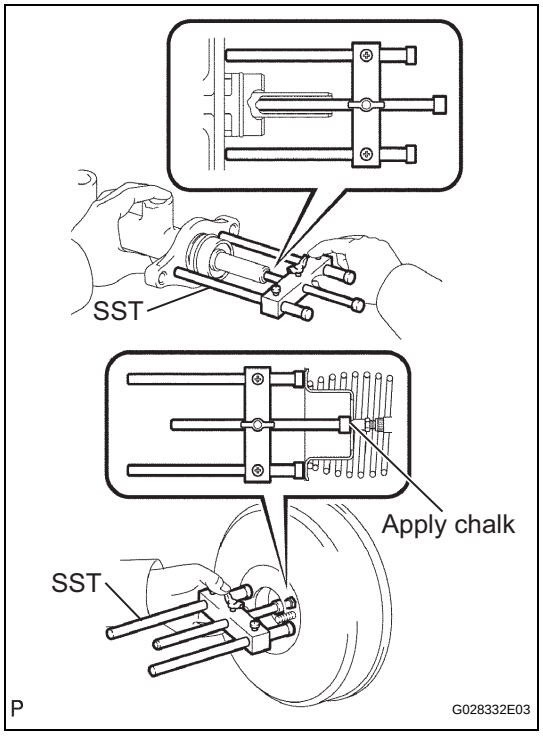

(c) If the clearance is not within the standard, adjust the length by holding the rod using SST and turning the tip of the rod using a socket driver (7 mm).
SST 09737-00020
HINT:
Check the push rod clearance again after adjustment.

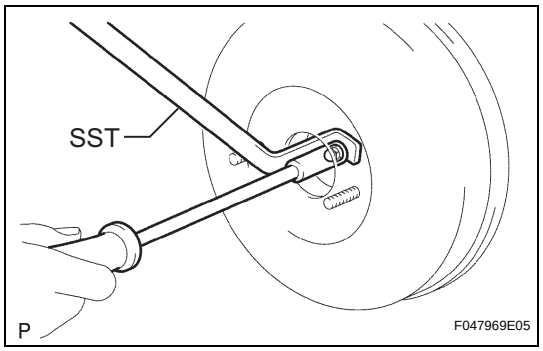

REASSEMBLY

1. INSTALL BRAKE MASTER CYLINDER KIT

(a) Placing aluminum plates between the vise and the master cylinder sub-assembly, place the master cylinder sub-assembly in the vise.

(b) Apply lithium soap base glycol grease to the rubber part as shown in the illustration.

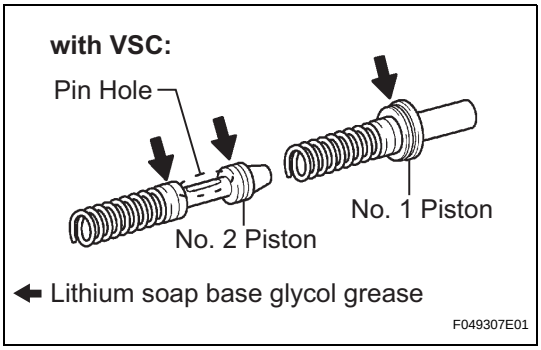

(c) Install the No. 1 and No. 2 pistons to the master cylinder body.

NOTICE:

- **Install the piston straight carefully not to give any damage to the inside of the cylinder.**
- **Do not damage the lip of the cylinder cup.**
- **with VSC:**
  Install the No. 2 piston with the pin hole facing upward.

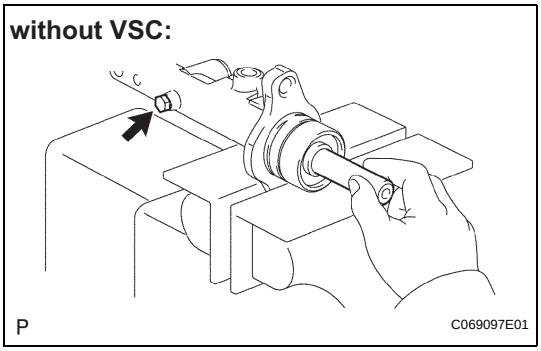

(d) without VSC:
Push in the piston and install a new gasket and a new piston stopper bolt.
Torque: 10 N*m (102 kgf*cm, 7 ft.*lbf)

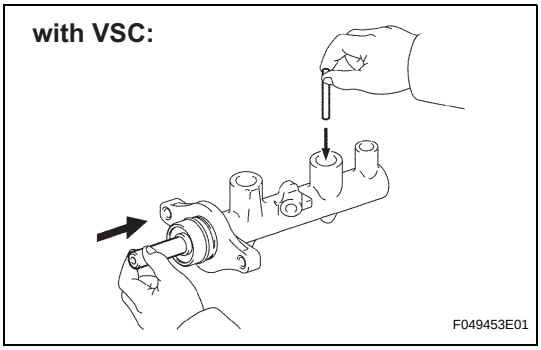

(e) with VSC:
Install the straight pin with the piston pushed in.
NOTICE:
Make sure that the straight pin is installed correctly.

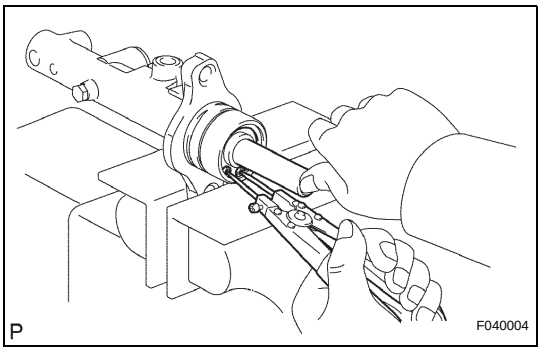

(f) Install the hole snap ring using snap ring pliers with the piston pushed in.
NOTICE:
Do not scratch the inside of the cylinder body.

(g) Apply lithium soap base glycol grease to a new O-ring.

(h) Install the O-ring to the master cylinder body.

2. INSTALL BRAKE MASTER CYLINDER RESERVOIR SUB-ASSEMBLY

(a) Install the strainer and cap to the reservoir sub-assembly.